DETALII NOD I
CONTRAVANTUIRE SUPERIOARA
DETAILS NODE I
TOP LATERAL BRACING

SC 1:10

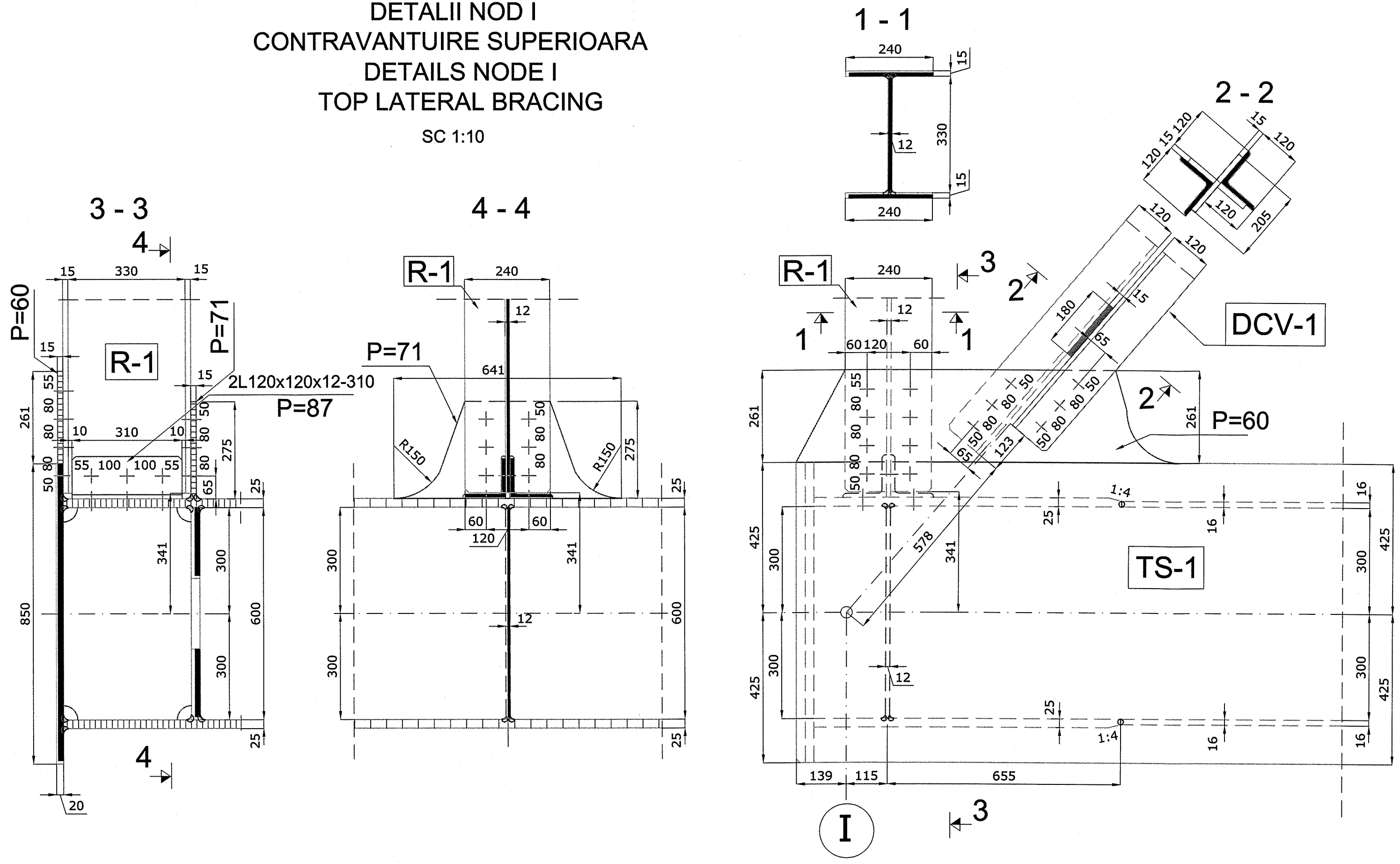

SCHEMA GENERALA TABLIER
GENERAL SCHEME SUPERSTRUCTURE

PLAN CONTRAVANTUIRE SUPERIOARA
TOP LATERAL BRACING PLAN

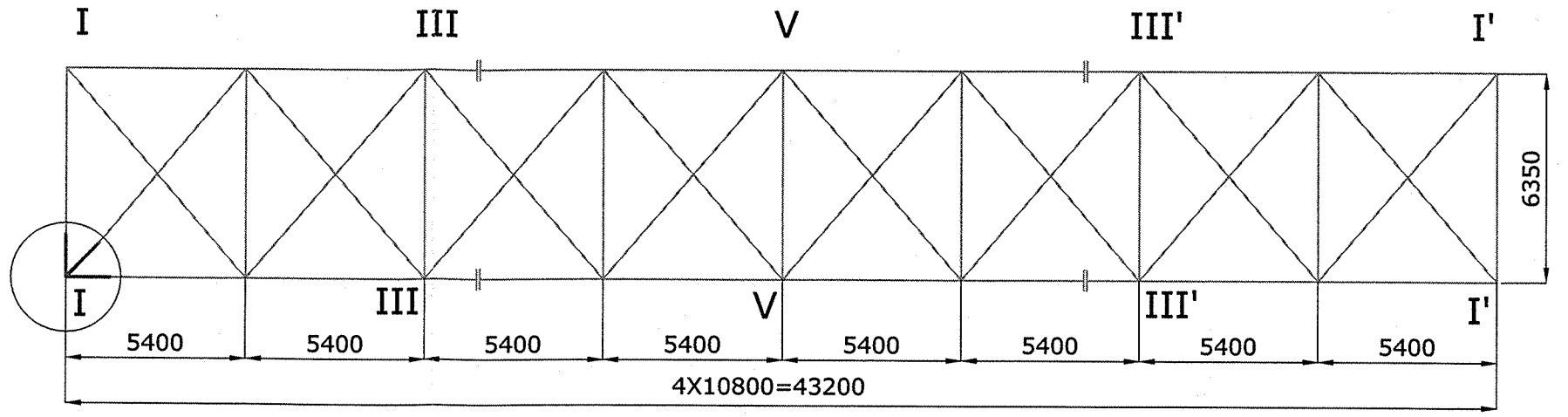

LEGENDA / LEGEND

SURUBURI / SCREWS
IP M24, GRUPA 10.9
SREN ISO 4014

DIMA I. ALEXANDRU
ROMANIA MLPAT NR.1159
INGINER VERIFICATOR PROIECTE

B			
A			
	Data / Date	Modificare / Modification / Revision	

BENEFICIAR/ BENEFICIARY : ROMANIAN RAILWAY NATIONAL COMPANY

AUTORITATEA DE IMPLEMENTARE/ IMPLEMENTUNG AUTHORITY: Ministerul Transporturilor / Ministry of Transports

AUTORITATEA CONTRACTANTA / CONTRACTING AUTHORITY: CFCU — Ministerul Economiei si Finantelor Oficiul de Plati si Contractare Phare / Ministry of Economy and Finances Phare Payments &Contracting Office

Contract / Contract: 1303/2007

Faza / Phase: PTh+DE TP+DD

prointec CONSIS PROIECT

Proiect finantat de UNIUNEA EUROPEANA / Project financed by EUROPEAN UNION — POS Transport 2007- 2013

Intocmit / Designed	Ing. Cristian Dima	Scara / Scale : 1:10	PORTOFOLIU DE PROIECTE PHARE CES 2005 / PHARE CES 2005 PROJECTS PORTFOLIO LOT 1 — Asistenta tehnica pentru pregatirea unor lucrari de reabilitare pentru tuneluri si poduri de cale ferata / Technical assistance for preparing rehabilitation works required by railway tunnels and bridges
Verificat / Checked	Ing. Ioan Dachin	Data / Date : 05.2009	Denumire desen / Drawing Title : Sucursala RCF/Railway district Bucuresti; Linia cf /Railway line 300 Bucuresti - Ploiesti; Pod / Bridge km 57+560 IMBINARI NOD I (I') CONTRAVANTUIRE SUPERIOARA / JOININGS NODE I (I') TOP LATERAL BRACING
Sef echipa / Team leader	Ing. Stelian Vara-Oros		Cod desen / Drawing Codes: PD 21 — Nr. / No: 21